Oakland City Planning Commission STAFF REPORT

Case File Number CMDV10257 **December 15, 2010**

Location:	**5650 Balmoral Drive (located at Balmoral and Skyline Boulevard)**
Assessor's Parcel Number:	**085 -0102-014-00**
Proposal:	Request for a Major Conditional Use Permit and Design Review to co-locate a total of six panel antennas and one equipment shelter for 8 cabinets located at the base of a new 68-foot tall Monopole Wireless Telecommunication Facility stealthed to resemble a tree.
Contact Person/ Phone Number:	Pat Kelly / Lyle Company (916) 281-5929
Owner:	East Bay Municipal Utility District
Planning Permits Required:	Major Conditional Use Permit and Regular Design Review to add a total of 6 antennas and add a new equipment shelter to a previously approved Monopole. Minor variance to mount antennas 55' above grade where 45' is allowed. All new antennas will be fully screened within "Mono-Pine".
General Plan:	Institutional
Zoning:	R-10
Environmental Determination:	Exempt, Section 15303 of the State CEQA Guidelines: Small Structures, Section 15183 of the State CEQA Guidelines: Projects consistent with a community plan, general plan or zoning
Historic Status:	None; large tree covered lot with a water tank, No Historic Ratings.
Service Delivery District:	4
City Council District:	6
Date Filed:	9/30/10
Staff Recommendation:	Approve with the attached conditions
Finality of Decision:	*Appealable to City Council within 10 days*
For Further Information:	Contact case planner **Jose M. Herrera-Preza, Planner I** at **(510) 238-3808** or jherrera@oaklandnet.com

SUMMARY

This project would provide for the co-location of six (6) panel antennas to a previously approved (CMD10-048) Monopole Telecommunications "Mono-Pine" Facility designed for stealth to resemble a tree. The facility is located on a large vacant lot with an existing grove of trees and a large water tank serving the East Bay Municipal Utility District. The project would also include an associated equipment shelter at the base of the facility located within a 12 –foot by 20 –foot gated compound screened by wooden fencing and 5' high shrubs. The previously approved "mono-Pine" was approved by the Commission on July 21, 2010.

A Major Conditional Use Permit, Design Review and Minor Variance is required for modifications to a Monopole Telecommunications Facilities located in residential zones. As detailed below, the project meets all of the required findings for approval. Therefore, staff recommends approval of the project subject to the attached conditions of approval.

CITY OF OAKLAND PLANNING COMMISSION

Case File: CMD10-257
Applicant: Pat Kelly/Lyle Company
Address: 5650 Balmoral Drive
Zone: R-10

PROPERTY DESCRIPTION

The subject property is a 2.42-acre up-slope parcel. The site contains a large East Bay Municipal Utility District water tank. The site is adjacent to resource conservation open space, approximately 130' from the nearest Skyline High School parking facility and approximately 250' from the nearest residential property.

PROJECT DESCRIPTION

The proposal would involve co-locating an additional six (6) panel antennas and one 12'x20' equipment shelter at the base of a proposed stealth telecom facility designed as a tree which is located inside a gated compound. The proposed antennas will be mounted within the canopy of the "Mono-Pine" and will have camouflage "socks" to match the color of the "Mono-Pine" to further mitigate any visual impact. **(See Attachment A)**

GENERAL PLAN ANALYSIS

The subject property is located within the Institutional General Plan designation. The Institutional land use classification is intended to create, maintain and enhance areas appropriate for educational facilities, cultural and institutional uses, health services and medical uses as well as other uses of similar character. The proposed unmanned wireless telecommunication facility will not adversely affect or detract from the institutional and residential characteristics of the neighborhood. The antennas will be mounted inside the canopy of a previously approved "Mono-Pine" and camouflaged to match the facility thus minimizing visual impacts. General Plan Policy N9.9 states that the City encourages that new development respects the architectural integrity of a building's original style.

ZONING ANALYSIS

The subject property is located within the R-10 Estate Residential Zone. The R-10 zone is intended to create, preserve, and enhance areas for single-family estate living at very low densities in spacious environments, and is typically appropriate to portions of the Oakland hill area. The proposal would provide for the co-location of wireless antennas on a previously approved unmanned wireless monopole telecommunication facility. The antennas would be located within the canopy of a previously approved "Mono-Pine" and painted and textured to match the "Mono-Pine". A major conditional use permit is required since the project is within the boundary of a residential zone and a minor variance to install the antennas 55' above grade where 45' is permitted. Staff finds that the proposed application meets the City of Oakland Telecommunication regulations (see Findings for Approval).

ENVIRONMENTAL DETERMINATION

The California Environmental Quality Act (CEQA) Guidelines categorically exempts specific types of projects from environmental review. Section 15303 of the State CEQA Guidelines exempts project involving construction or location of new, small facilities or structures. The proposal to co-locate a new unmanned telecommunications facility containing 6 antennas and to establish other minor equipment shelter at ground-level adjacent to and connecting to the monopole meets this description: the project would constitute a minor addition only. The project is therefore exempt from Environmental Review.

KEY ISSUES AND IMPACTS

In addition to ensuring this type of request meets required legal findings, proposed wireless telecommunications facilities must meet specific development standards, and site location and design preferences, and possesses a satisfactory radio frequency emissions report.

1. Conditional Use Permit

Section 17.16.070 of the City of Oakland Planning Code requires a conditional use permit to install a Macro Telecommunication facility in the R-10 Zone. The required findings for a major conditional use permit are listed and included in staff's evaluation as part of this report.

2. Project Site

Section 17.128.110 of the City of Oakland Telecommunication Regulations requires that wireless facilities shall generally be located on designated properties or facilities in the following order of preference:

A. Co-located on an existing structure or facility with existing wireless antennas.
B. City owned properties or other public or quasi-public facilities.
C. Existing commercial or industrial structures in non-residential zones.
D. Existing commercial or industrial structures in residential zones.
E. Other non-residential uses in residential zones.
F. Residential uses in non-residential zones.
G. Residential uses in residential zones.

*Facilities locating on an A, B or C ranked preference do not require a site alternatives analysis.

Since the proposed project involves the co-location of a new unmanned wireless facility on an previously approved wireless facility, the proposed development meets the (A) co-located on an existing structure or facility with existing wireless antennas, therefore a site alternatives analysis is not required.

3. Project Design

Section 17.128.120 of the City of Oakland Telecommunications Regulations indicates that new wireless facilities shall generally be designed in the following order of preference:

A. Building or structure mounted antennas completely concealed from view.
B. Building or structure mounted antennas set back from roof edge, not visible from public right-of way.

C. Building or structure mounted antennas below roof line (facade mount, pole mount) visible from public right-of-way, painted to match existing structure.
D. Building or structure mounted antennas above roof line visible from public right of-way.
E. Monopoles.
F. Towers.

* Facilities designed to meet an A or B ranked preference do not require site design alternatives analysis. Facilities designed to meet a C through F ranked preference, inclusive, must submit a site design alternatives analysis as part of the required application materials. A site design alternatives analysis shall, at a minimum, consist of:

The project meets design criteria (A) since all six (6) panel antennas will be mounted within the "Mono-Pine" canopy, painted and textured to match the tree canopy, setback from any property line at least 220' and surrounded by naturally occurring grove of mature trees thus minimizing their impacts from the public view. Furthermore, to mitigate visual impacts the antennas will be mounted 55' above the pedestrian pathway. The associated equipment cabinets would have no visual impact since the equipment cabinets would be fully enclosed and located inside a new equipment shelter located at the base of the "Mono-Pine" and would be adequately concealed from the public right of way or immediate neighbors.

4. Project Radio Frequency Emissions Standards

Section 17.128.130 of the City of Oakland Telecommunication Regulations require that the applicant submit the following verifications including requests for modifications to existing facilities:

a. With the initial application, a RF emissions report, prepared by a licensed professional engineer or other expert, indicating that the proposed site will operate within the current acceptable thresholds as established by the Federal government or any such agency who may be subsequently authorized to establish such standards.
b. Prior to commencement of construction, a RF emissions report indicating the baseline RF emissions condition at the proposed site.
c. Prior to final building permit sign off, an RF emissions report indicating that the site is actually operating within the acceptable thresholds as established by the Federal government or any such agency who may be subsequently authorized to establish such standards.

RFA emissions report, prepared by Evan Wappel, BSc, EE, Market RF Safety Coordinator for AT&T indicates that the proposed project meets the radio frequency (RF) emissions standards as required by the regulatory agency. The report states that the proposed project will comply with the prevailing standards for limiting public exposure to radio frequency energy and, therefore, will not cause a significant impact on the environment. Additionally, staff recommends as a condition of approval that prior to the issuance of a final building permit, that the applicant submits certified RF emissions report stating that the facility is operating within acceptable thresholds established by the regulatory federal agency.

CONCLUSION

The proposed project has been designed to significantly reduce the visual impacts of co-locating new panel antennas within the tree canopy of a previously approved Monopole facility and screening all other associated ground level equipment. Therefore, staff recommends approval of the requested Major

Conditional Use Permit, Regular Design Review, and Minor Variance to allow for the co-location of panel antennas inside a stealth tree Monopole.

RECOMMENDATIONS:

1. Affirm staff's environmental determination.
2. Approve the Major Conditional Use Permit, Regular Design Review, and the Minor Variance subject to the attached Findings and Conditions.

Prepared by:

Jose M. Herrera-Preza
Planner I

Approved by:

SCOTT MILLER
Zoning Manager

Approved for forwarding to the
City Planning Commission:

ERIC ANGSTADT
Deputy Director
Community and Economic Development Agency

ATTACHMENTS:

A. Project Plans & Photo Simulations

Findings for Approval

This proposal meets the required findings under Section 17.134.050, General Use Permit Criteria; Section 17.128.070(C), Conditional Use Permit Criteria for Monopole Facilities; Section 17.136.040(A), Regular Design Review; and Section 17.128.070(B), Design Review Criteria for Monopole Facilities, as set forth below. Required findings are shown in bold type; explanations as to why these findings can be made are in normal type.

SECTION 17.134.050 – GENERAL USE PERMIT CRITERIA:

A. That the location, size, design, and operating characteristics of the proposed development will be compatible with and will not adversely affect the livability or appropriate development of abutting properties and the surrounding neighborhood, with consideration to be given to harmony in scale, bulk, coverage, and density; to the availability of civic facilities and utilities; to harmful effect, if any, upon desirable neighborhood character; to the generation of traffic and the capacity of surrounding streets; and to any other relevant impact of the development.

The proposal involves the co-location of antennas on a previously approved monopole wireless telecommunications inside the canopy of a "stealth tree" monopole facility located on a large lot sited next to an existing 30' water tank, and located within a residential zone. Specifically, it would provide for six (6) new panel antennas 55' above grade in the upper portions of the new monopole within the canopy of the stealth tree. The proposal would also result in the creation of new screened, secured, and camouflage equipment cabinets and associated facilities located at ground level. The proposal will not adversely affect the livability or appropriate development of the surrounding properties since the co-location onto stealth telecommunications facility is a desirable alternative to having multiple monopoles throughout the neighborhood or establishing a new telecommunications facility at a more visible site.

B. That the location, design, and site planning of the proposed development will provide a convenient and functional living, working, shopping, or civic environment, and will be as attractive as the nature of the use and its location and setting warrant.

The addition of wireless antennas on a previously approved stealth tree wireless telecommunications facility in a residential zone surrounded by existing trees and open space will provide for a convenient and functional living, working, and civic environment by improving telecommunications services within the area without generating negative aesthetic impacts . The inclusion of tree camouflaging, paint, screening, and landscaping will lessen the impacts of the proposed facilities as seen from street level.

C. That the proposed development will enhance the successful operation of the surrounding area in its basic community functions, or will provide an essential service to the community or region.

The proposed development will enhance the successful operation of the surrounding area in its basic community function and will provide an essential service to the community or region. This will be achieved by improving the functional use of the site by providing a regional telecommunication facility for the community and will be available to police, fire, public safety organizations and the general public.

D. That the proposal conforms to all applicable design review criteria set forth in the design review procedure at Section 17.136.070.

The proposal conforms with all significant aspects of the design review criteria set forth in Chapter 17.136 of the Oakland Planning Code, as outlined below.

E. That the proposal conforms in all significant respects with the Oakland Comprehensive Plan and with any other applicable plan or development control map which has been adopted by the City Council.

The project is consistent with the following Policy of the Oakland General Plan's Land Use & Transportation Element (adopted 1998):

> ***Policy N1.5 Designing Commercial Development***
> *Commercial development should be designed in a manner that is sensitive to surrounding residential uses.*

SECTION 17.128.070(C) – CONDITIONAL USE PERMIT CRITERIA FOR MONOPOLE FACILITIES.

In addition to the conditional use criteria listed in Chapter 17.134, the following specific additional criteria must be met before a conditional use permit can be granted:

1..The project must meet the special design review criteria listed in subsection B of this section.

The proposal conforms to Design Review findings which are included in that section of this attachment of Findings for Approval.

2. Monopoles should not be located any closer than one thousand five hundred (1,500) feet from existing monopoles unless technologically required or visually preferable.

No additional monopoles were identified as being within 1,500 feet of the proposal.

3. The proposed project must not disrupt the overall community character.

The co-location of a new macro facility onto a previously approved monopole, that will appear as a large conifer tree, will not alter or disrupt the current overall character of the community since it will sited within a grove of tress on a site currently used by EBMUD.

SECTION 17.136.050.A - REGULAR DESIGN REVIEW CRITERIA:

1. That the proposed design will create a building or set of buildings that are well related to the surrounding area in their setting, scale, bulk, height, materials, and textures:

The proposed co-location of six panel antennas onto a previously approved monopole in which is designed to resemble a large conifer tree near the center of a large lot that contains an East Bay Municipal Utility District water tank and a large number of well established trees of similar size and appearance The proposed project to co-locate a new macro telecommunications facility will be well related to the surrounding area in

their use of concealing the antennas with the tress canopy, color of antennas and texture of the finishes will further address any visual impacts. The proposed equipment shelter will be located at the base of the monopole within a 12-foot by 20-foot screened and fenced area surrounded by shrubs that are designed to reach a height of 5 feet. Per specific condition #17 all of the related equipment and facilities will be painted in a color that will help to further conceal ground level apparatus. The design is compatible with the existing water tower and site.

2. That the proposed design will protect, preserve, or enhance desirable neighborhood characteristics;

The proposed project is designed in a manner that will reduce visual impacts from the surrounding the neighborhood through the use of a previously approved monopole intended to match the height, color and style of trees currently on the subject property. Use of the existing monopole will preserve the existing desirable natural occurring landscape and protect from establishing new monopoles in the area.

3. That the proposed design will be sensitive to the topography and landscape.

The proposed co-location of antennas inside the monopole tree canopy takes into consideration the existing landscape and natural occurring tree line on the subject property. Furthermore the antennas will be painted and textured to further imitate the natural environment.

4. That, if situated on a hill, the design and massing of the proposed building relates to the grade of the hill.

The proposed project will co-locate antennas onto a previously approved monopole. This project will not affect the grade of the property.

5. That the proposed design conforms in all significant respects with the Oakland General Plan and with any applicable design review guidelines or criteria, district plan, or development control map which have been adopted by the Planning Commission or City Council.

The proposal adheres to all site design requirements under the Telecommunications Regulation of the Planning Code.

SECTION 17.128.080(B) – DESIGN REVIEW CRITERIA FOR MONOPOLE FACILITIES

In addition to the design review criteria listed in Chapter 17.136, the following specific additional criteria must be met when design review is required before an application can be granted:

1. Collocation is to be encouraged when it will decrease visual impact and collocation is to be discouraged when it will increase negative visual impact.

The proposed co-location will decrease the visual impact since the previously approved monopole facility will resemble a large conifer tree similar to the existing landscape on the property. Furthermore the antennas will be painted to match the color of the surrounding area and tree line.

2. Monopoles should not be sited to create visual clutter or negatively affect specific views.

The proposal to co-locate six antennas onto a previously approved monopole is intended to fully screen antennas from the surrounding neighborhood and designed to fade into the surrounding open space when viewed from the surrounding area. Thus avoiding visual clutter and negatively affecting existing views.

3. Monopoles shall be screened from the public view wherever possible.

The proposed co-location would be painted and designed to fade into the surrounding hillside and tree line when viewed from the surrounding area. The existing water tower represents an established visual element at this location and would not be altered as part of this proposal.

4. Equipment shelter or cabinet must be concealed from public view or made compatible with the architecture of the surrounding structures or placed underground. The shelter or cabinet must be regularly maintained.

The Equipment cabinets or shelters would be painted green and landscaped to match in color the surrounding area and tree line.

5. Site location and development shall preserve the preexisting character of the surrounding buildings and land uses and the zone district as much as possible. Wireless communication towers shall be integrated through location and design to blend in with the existing characteristics of the site to the extent practical. Existing on-site vegetation shall be preserved or improved, and disturbance of the existing topography shall be minimized, unless such disturbance would result in less visual impact of the site to the surrounding area. Equipment shelters or cabinets shall be consistent with the general character of the area.

The proposal calls for a co-location onto a proposed monopole designed to resemble a large conifer tree and is located near the center of a large lot that contains a large water tank and a large number of well established trees. The equipment cabinets and other associated facilities are located within a screened and fenced area surrounded by shrubs. The entire Facility would be painted and designed to fade into the surrounding open space when viewed from the surrounding area.

6. That all reasonable means of reducing public access to the antennas and equipment has been made, including, but not limited to, placement in or on buildings or structures, fencing, anti-climbing measures and anti-tampering devices.

The proposed telecommunications facility will be sited within a large lot that is surround existing chain link fence. The compound site areas will also be surrounded by a 12-foot by 20-foot wood fence and screening.

17.148.050 - VARIANCE CRITERIA:

A) Strict compliance with the specified regulations would result in practical difficulty or unnecessary hardship inconsistent with the purpose of the Zoning Regulations, due to unique physical or topographic circumstances or conditions of design; or, as

an alternative in the case of a minor variance, that such strict compliance would preclude an effective design solution improving livability, operational efficiency, or appearance:

The proposal will co-locate six panel antennas and one equipment shelter on a previously approved monopole on a large upslope lot in the Skyline District of Oakland hills. The previously approved monopole would be 73 feet tall (68 feet to the top of the pole and 73 feet to the top of the camouflaging tree branch elements). The proposal will co-locate new panel antennas 55' above grade where 45' is allowed. The proposed antennas inside the stealth tree camouflaged monopole will better integrate into the tree line at this height outside any natural view plane from street level. The stealthy design is vital in maintaining the aesthetic values of the upper hills area and neighborhood.

B) Strict compliance with the regulations would deprive the applicant of privileges enjoyed by owners of similarly zoned property; or as an alternative in the case of a minor variance, that such strict compliance would preclude an effective design solution fulfilling the basic intent of the applicable regulation:

The restrictions of a 45-foot height would create an ineffective design at this location due to the requirements of the telecommunication equipment to operate with out obstruction of signal by topographic contour. In this case a single more effective and highly camouflaged tree offers the best design solution to co-locate different telecommunications carriers and fulfills the intent of the regulations by disguising the otherwise large and obtrusive visual impact that monopoles generally create. The design will integrate into the existing neighborhood character by maintaining the appearance of the wooded hillside.

C) The variance, if granted, will not adversely affect the character, livability, or appropriate development of abutting properties or the surrounding area, and will not be detrimental to the public welfare or contrary to adopted plans or development policy:

The project will utilize extensive camouflaging techniques and will co-locate on a single monopole that will blend in with the character of the surrounding area. This proposal will enhance telecommunications uses in the area while not changing the defined residential character of Balmoral Drive. It will be consistent with the adopted development policies and plans for the area. Its stealth design elements and location will prevent adversely affect the abutting properties or surrounding area.

D) The variance will not constitute a grant of special privilege inconsistent with limitations imposed on similarly zoned properties or inconsistent with the purposes of the Zoning Regulations:

The proposed co-location on a stealth monopole is in character with the open tree filled nature of the subject property. The establishment of a monopole that allows for co-location and stealth features is a preferable design solution and in no case constitutes a grant of special privileges.

E) That the elements of the proposal requiring the variance (e.g. elements such as buildings, walls, fences, driveways, garages and carports, etc.) conform with Regular Design review Criteria set forth in the design review procedures at section 17.136.050:

The proposed design will co-locate six (6) panel antennas on a new monopole and ground level equipment compound that will be screened from view. All of the proposed facilities are located at least 130 feet from the nearest perimeter fences and 180 feet from Balmoral Drive. The proposal has been designed to match the tree line and to be concealed at ground level. It is sufficiently set back from the front and side property line to reduce the visual mass and bulk of the structure (tree monopole), and to complement the surrounding area. The design uses the same evergreen trees (conifers) style as those that are common to the area.

F) <u>For proposals involving one or two residential dwelling units on a lot</u>: That, if the variance would relax a regulation governing maximum height, minimum yards, maximum lot coverage or building length along side lot lines, the proposal also conforms with <u>at least one</u> of the following criteria:

The proposal when viewed in its entirety will not adversely impact abutting residences to the side, rear, or directly across the street with respect to solar access, view blockage and privacy to a degree greater than that which would be possible if the residence were built according to the applicable regulation and, for height variances, the proposal provides detailing, articulation or other design treatments that mitigate any bulk created by the additional height:

-OR-

Over 60 percent of the lots in the immediate vicinity are already developed and the proposal does not exceed the corresponding as-built condition on these lots and, for height variances, the proposal provides detailing, articulation or other design treatments that mitigate any bulk created by additional height. The immediate context shall consist of the five closest lots on each side of the project site, plus ten closest lots on the opposite side of the street (see illustration I-4b); however, the Director of City Planning may make an alterative determination of immediate

context based on specific site conditions. Such determination shall be in writing and included as part of any decision on any variance.

The proposed is not for a residential structure. This finding does not apply.

Conditions of Approval

STANDARD CONDITIONS:

1. **Approved Use**
   Ongoing
   a) The project shall be constructed and operated in accordance with the authorized use as described in the application materials, **CMDV10257**, and the plans dated **September 30, 2010** and submitted on **September 30, 2010** and as amended by the following conditions. Any additional uses or facilities other than those approved with this permit, as described in the project description and the approved plans, will require a separate application and approval. Any deviation from the approved drawings, Conditions of Approval or use shall required prior written approval from the Director of City Planning or designee.

   b) This action by the City Planning Commission ("this Approval") includes the approvals set forth below. This Approval includes: **The co-location of a new unmanned macro telecommunications facility located along the rooftop of an existing commercial building, under Oakland Planning Code 17.128**

2. **Effective Date, Expiration, Extensions and Extinguishment**
   Ongoing
   Unless a different termination date is prescribed, this Approval shall expire **two calendar years** from the approval date, unless within such period all necessary permits for construction or alteration have been issued, or the authorized activities have commenced in the case of a permit not involving construction or alteration. Upon written request and payment of appropriate fees submitted no later than the expiration date of this permit, the Director of City Planning or designee may grant a one-year extension of this date, with additional extensions subject to approval by the approving body. Expiration of any necessary building permit for this project may invalidate this Approval if the said extension period has also expired.

3. **Scope of This Approval; Major and Minor Changes**
   Ongoing
   The project is approved pursuant to the **Oakland Planning Code Telecommunications Regulations** only. Minor changes to approved plans may be approved administratively by the Director of City Planning or designee. Major changes to the approved plans shall be reviewed by the Director of City Planning or designee to determine whether such changes require submittal and approval of a revision to the approved project by the approving body or a new, completely independent permit.

4. **Conformance with other Requirements**
   Prior to issuance of a demolition, grading, P-job, or other construction related permit
   a) The project applicant shall comply with all other applicable federal, state, regional and/or local codes, requirements, regulations, and guidelines, including but not limited to those imposed by the City's Building Services Division, the City's Fire Marshal, and the City's Public Works Agency.
   b) The applicant shall submit approved building plans for project-specific needs related to fire protection to the Fire Services Division for review and approval, including, but not limited to

automatic extinguishing systems, water supply improvements and hydrants, fire department access, and vegetation management for preventing fires and soil erosion.

5. **Conformance to Approved Plans; Modification of Conditions or Revocation**
   Ongoing
   a) Site shall be kept in a blight/nuisance-free condition. Any existing blight or nuisance shall be abated within 60-90 days of approval, unless an earlier date is specified elsewhere.

   b) The City of Oakland reserves the right at any time during construction to require certification by a licensed professional that the as-built project conforms to all applicable zoning requirements, including but not limited to approved maximum heights and minimum setbacks. Failure to construct the project in accordance with approved plans may result in remedial reconstruction, permit revocation, permit modification, stop work, permit suspension or other corrective action.

   c) Violation of any term, conditions or project description relating to the Approvals is unlawful, prohibited, and a violation of the Oakland Municipal Code. The City of Oakland reserves the right to initiate civil and/or criminal enforcement and/or abatement proceedings, or after notice and public hearing, to revoke the Approvals or alter these conditions if it is found that there is violation of any of the conditions or the provisions of the Planning Code or Municipal Code, or the project operates as or causes a public nuisance. This provision is not intended to, nor does it, limit in any manner whatsoever the ability of the City to take appropriate enforcement actions.

6. **Signed Copy of the Conditions**
   With submittal of a demolition, grading, and building permit
   A copy of the approval letter and conditions shall be signed by the property owner, notarized, and submitted with each set of permit plans to the appropriate City agency for this project.

7. **Indemnification**
   a) ***Ongoing*** The project applicant shall defend (with counsel reasonably acceptable to the City), indemnify, and hold harmless the City of Oakland, the Oakland City Council, the City of Oakland Redevelopment Agency, the Oakland City Planning Commission and their respective agents, officers, and employees (hereafter collectively called the City) from any claim, action, or proceeding (including legal costs and attorney's fees) against the City to attack, set aside, void or annul this Approval, or any related approval by the City. The City shall promptly notify the project applicant of any claim, action or proceeding and the City shall cooperate fully in such defense. The City may elect, in its sole discretion, to participate in the defense of said claim, action, or proceeding. The project applicant shall reimburse the City for its reasonable legal costs and attorney's fees.

   b) Within ten (10) calendar days of the filing of a claim, action or proceeding to attack, set aside, void, or annul this Approval, or any related approval by the City, the project applicant shall execute a Letter Agreement with the City, acceptable to the Office of the City Attorney, which memorializes the above obligations and this condition of approval. This condition/obligation shall survive termination, extinguishment, or invalidation of this, or any related approval. Failure to timely execute the Letter Agreement does not relieve the project applicant of any of the obligations contained in 7(a) above, or other conditions of approval.

8. Compliance with Conditions of Approval

Ongoing

The project applicant shall be responsible for compliance with the recommendations in any submitted and approved technical report and all the Conditions of Approval set forth below at its sole cost and expense, and subject to review and approval of the City of Oakland.

9. Severability

Ongoing

Approval of the project would not have been granted but for the applicability and validity of each and every one of the specified conditions, and if any one or more of such conditions is found to be invalid by a court of competent jurisdiction this Approval would not have been granted without requiring other valid conditions consistent with achieving the same purpose and intent of such Approval.

10. Job Site Plans

Ongoing throughout demolition, grading, and/or construction

At least one (1) copy of the stamped approved plans, along with the Approval Letter and Conditions of Approval, shall be available for review at the job site at all times.

11. Operational

Ongoing.

Noise levels from the activity, property, or any mechanical equipment on site shall comply with the performance standards of Section 17.120 of the Oakland Planning Code and Section 8.18 of the Oakland Municipal Code. If noise levels exceed these standards, the activity causing the noise shall be abated until appropriate noise reduction measures have been installed and compliance verified by the Planning and Zoning Division and Building Services.

PROJECT SPECIFIC CONDTIONS:

12. Sinking Fund For Facility Removal or Abandonment.

Prior to the issuance of building permit.

The applicant shall provide proof of the establishment of a sinking fund to cover the cost of removing the facility if it is abandoned within a prescribed period. The word "abandoned" shall mean a facility that has not been operational for a six (6) month period, except where non-operation is the result of maintenance of renovation activity pursuant to valid City permits. The sinking fund shall be established to cover a two-year period, at a financial institution approved by the City's Office of Budget and Finance. The sinking fund payment shall be determined by the Office of Budget and Finance and shall be adequate to defray expenses associated with the removal of the telecommunication facility.

13. Emissions Report

Prior to a final inspection

The applicant shall provide an RF emissions report to the City of Oakland Zoning Division indicating that the site is actually operating within the acceptable thresholds as established by the Federal government or any such agency that may be subsequently authorized to establish such standards.

14. Monopole Tree Camouflaging

Prior to a final inspection

The Monopole tree stealth /camouflaging facilities and application (branches, bark texture, paint etc.) shall be maintained in good condition and replaced as needed. The monopoles condition shall be periodically monitored and evaluated at the discretion of the Zoning Manager. Furthermore, the tree monopole shall be partially repaired, or wholly repainted or replaced at the Zoning Manager's request, should it fall into disrepair.

15. Equipment Cabinets, Fence and Landscaping

Prior to a final inspection

The equipment cabinets, enclosure fencing (wood) shall be maintained in good condition and partially or wholly repainted or treated (different colors) at the Zoning Managers discretion or request. All landscaping elements (hedges / shrubs) shall be maintained in good condition and replaced as needed. The area surrounding the equipment and monopole fence compound shall be kept clear of weeds for a distance of 10 feet.

APPROVED BY:

City Planning Commission:_____(December 15, 2010)_____(vote)

RECEIVED
SEP 30 2010
City of Oakland
Planning & Zoning Division

at

MADRONE WATE
CN497

PROJECT DESCRIPTION

A (P) UNMANNED TELECOMMUNICATION FACILITY CONSISTING OF (3) (P) 2206 RBS CABINETS, (3) (P) 3206 RBS CABINETS, A (P) 6601 RBS CABINET INSIDE A (P) 19" RACK, (2) BBU'S, & (2) RRU'S INSIDE A (P) 12'X20' EQUIPMENT SHELTER. ALSO (6) (N) ANTENNAS, (6) (N) DTMA'S & (4) (N) RRU'S ON AN (E) MONOPINE.

PROJECT INFORMATION

SITE NAME:	MADRONE WATER TANK	SITE #:	CN4974
COUNTY:	ALAMEDA	JURISDICTION:	CITY OF OAKLAND
APN:	085-0102-014	POWER:	PG&E
		TELEPHONE:	AT&T
SITE ADDRESS:	12250 SKYLINE BOULEVARD OAKLAND, CA 94619		
CURRENT ZONING:	R-10		
CONSTRUCTION TYPE:	II		
OCCUPANCY TYPE:	U		
PROPERTY OWNER:	EAST BAY MUNICIPAL UTILITY DISTRICT 375 11TH STREET OAKLAND, CA 94607		
APPLICANT:	AT&T 4430 ROSEWOOD DR BLDG 3, 6TH FLOOR PLEASANTON, CA 94588		
LEASING CONTACT:	ATTN: LES NEDERVELD (916) 607-4449		
ZONING CONTACT:	ATTN: PAT KELLY (916) 281-5929		
CONSTRUCTION CONTACT:	ATTN: JIM KINDLE (916) 390-9731		
LATITUDE: LONGITUDE:	N 37° 47' 57.70" NAD 83 W 122° 09' 49.23" NAD 83		
AMSL:	±1155'		

VICINITY MAP

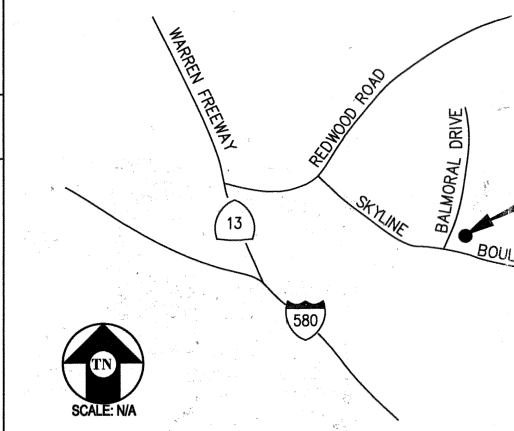

DRIVING DIRECTIO

FROM: 4430 ROSEWOOD DR BLDG 3, 6TH FLOOR, PLEASANTON, CA 9
TO: 12250 SKYLINE BLVD OAKLAND, CA 94619

1. START OUT GOING SOUTHEAST ON ROSEWOOD DR TOWARD OLD SANTA
2. TURN LEFT ONTO SANTA RITA RD.
3. STAY STRAIGHT TO GO ONTO TASSAJARA RD.
4. MERGE ONTO I-580 W TOWARD OAKLAND.
5. MERGE ONTO CA-13 N VIA EXIT 26A TOWARD BERKELEY.
6. TAKE THE CARSON ST EXIT TOWARD REDWOOD RD.
7. RAMP BECOMES MOUNTAIN BLVD.
8. TURN SLIGHT RIGHT ONTO REDWOOD RD.
9. TURN RIGHT ONTO SKYLINE BLVD.
10. MAKE A U-TURN ONTO SKYLINE BLVD.

END AT: 12250 SKYLINE BLVD OAKLAND, CA 94619

ESTIMATED TIME: 31 MINUTES ESTIMATED DISTANCE: 25.78 MILES

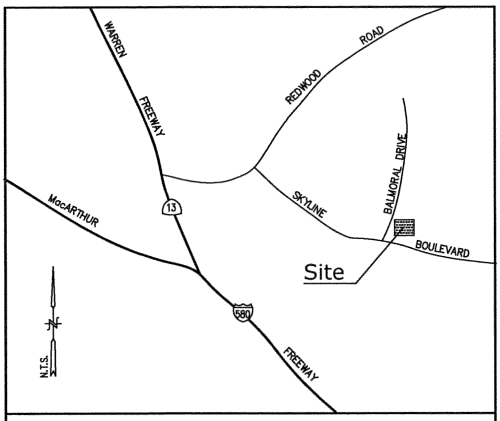

Vicinity Map

Title Report

THIS SURVEY WAS COMPLETED WITHOUT THE BENEFIT OF A TITLE REPORT.
PREPARED BY:
ORDER NO.:
DATED:

Legal Description

PORTION OF THE SOUTHWEST 1/4 OF THE SECTION 35, TOWNSHIP 1 SOUTH, RANGE 3 WEST, MOUNT DIABLO BASE AND MERIDIAN IN THE CITY OF OAKLAND COUNTY OF ALAMEDA.

Assessor's Parcel No.

085-0102-014

Easements

NOT AVAILABLE

Access Easement/

TO BE DETERMINED

Geographic Coord

1983 DATUM: LATITUDE 37° 47' 57.7
ELEVATION = 1155.0 FEET ABOVE MEA

CERTIFICATION:
THE LATITUDE AND LONGITUDE SHOWN
HORIZONTALLY AND THAT THE ELEVATI
VERTICALLY. THE HORIZONTAL DATUM
AMERICAN DATUM OF 1983 (NAD 83)
SECONDS (") TO THE NEAREST HUNDR
IN TERMS OF THE NORTH AMERICAN V
THE NEAREST TENTH OF A FOOT.

Overall Site Detail

SCALE: 1"=30'

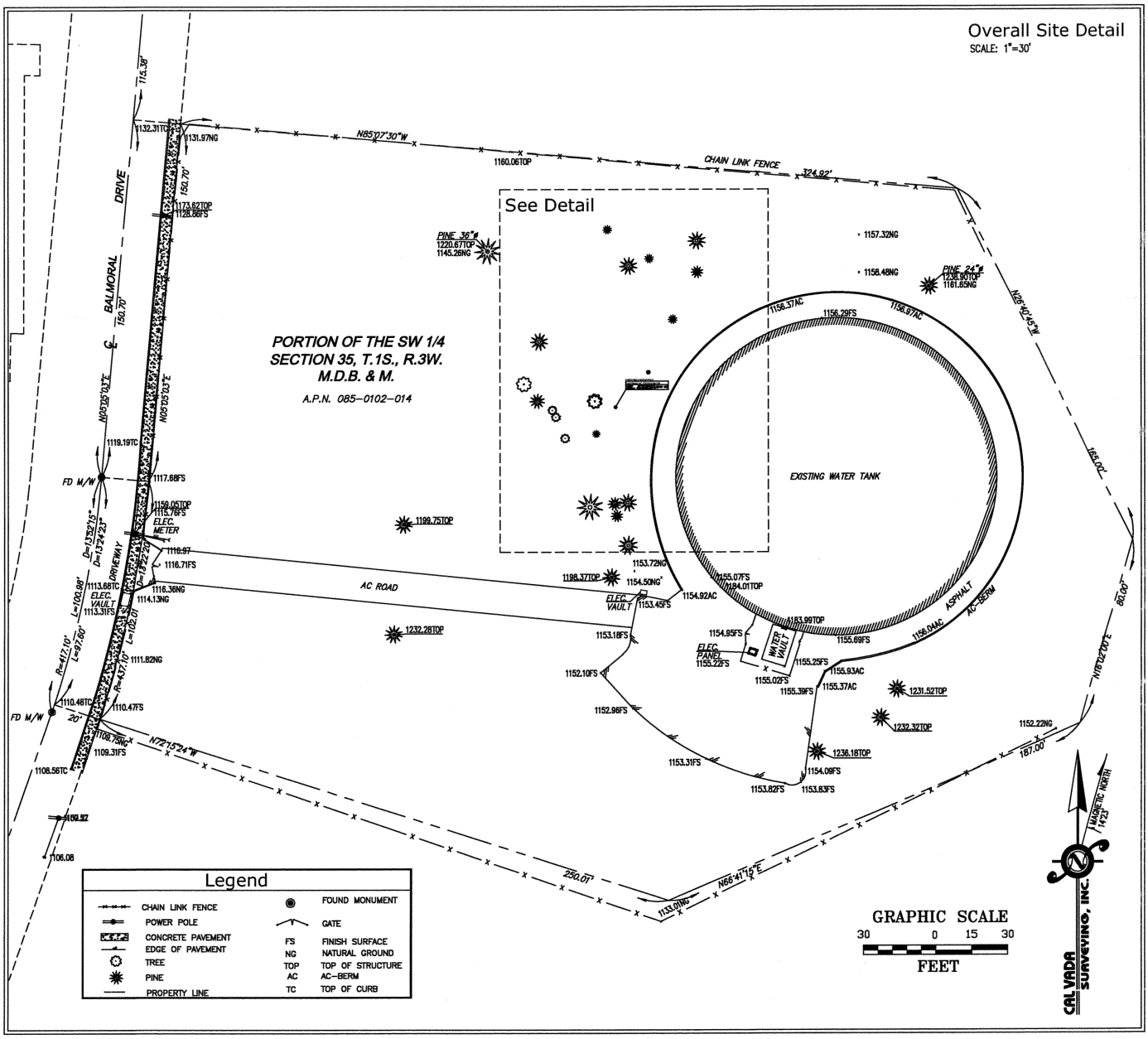

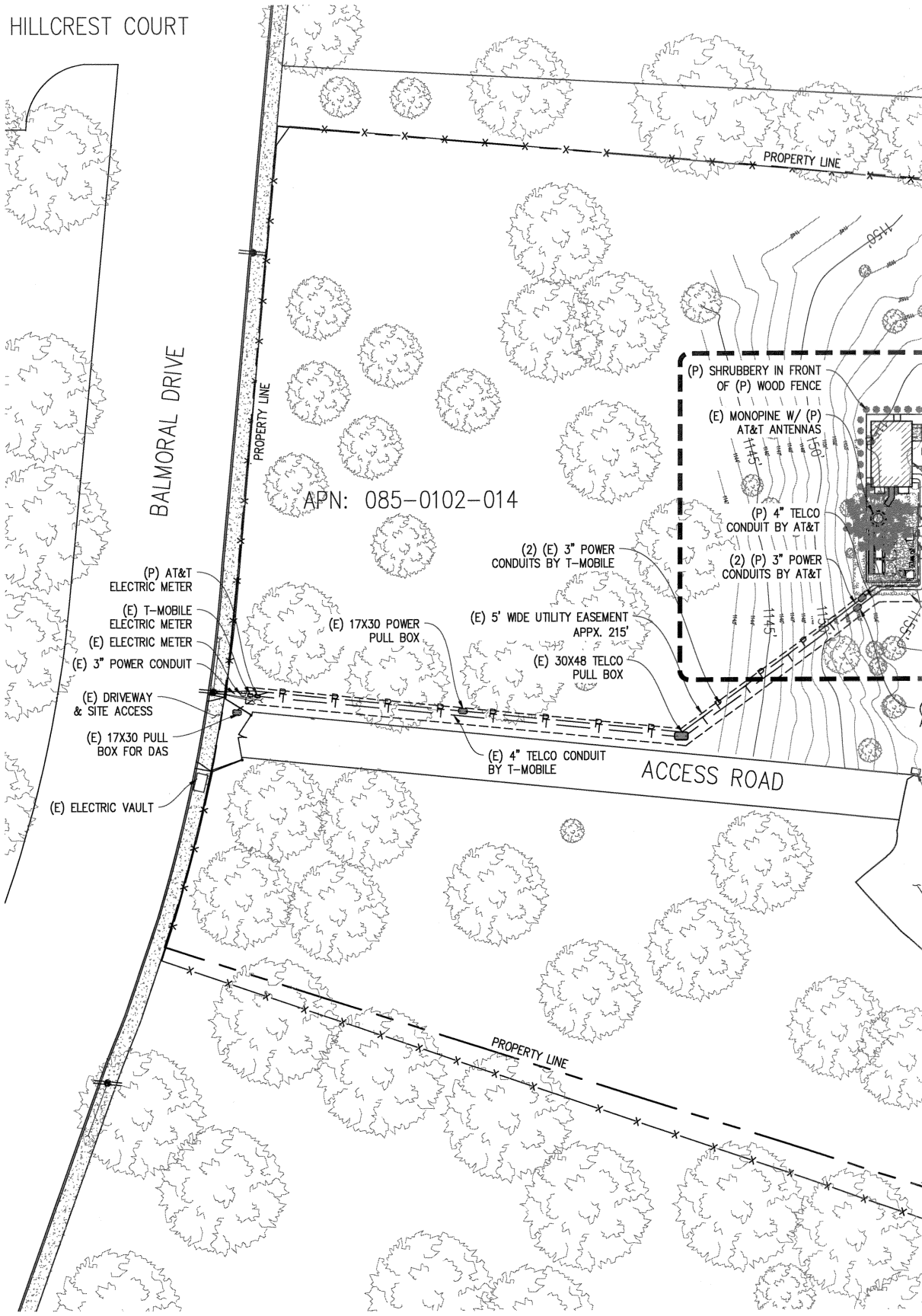

SITE PLAN

1"=20'

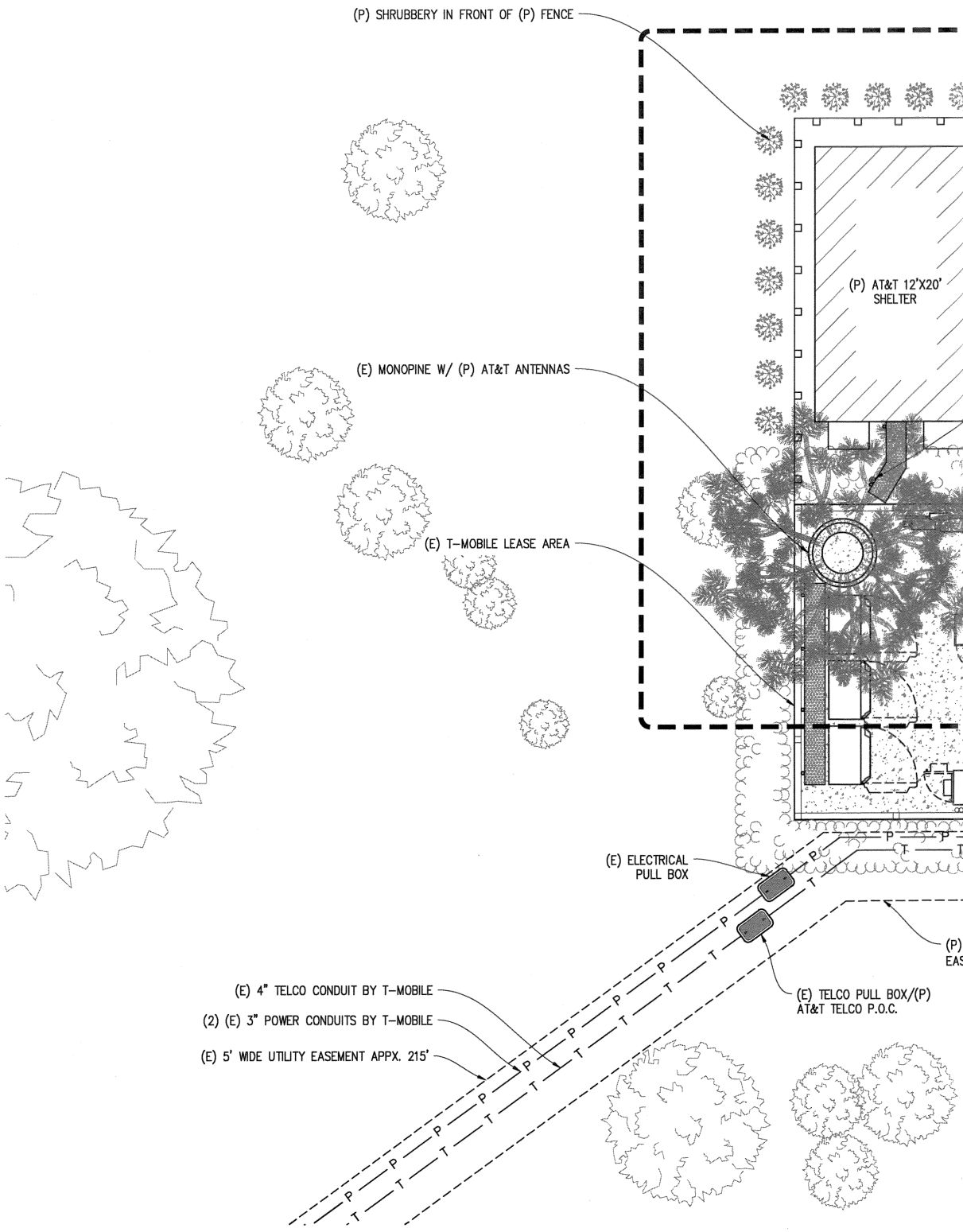

ENLARGED SIT

1"=5'

0 1' 2' 3' 4' 5' 10' 15'

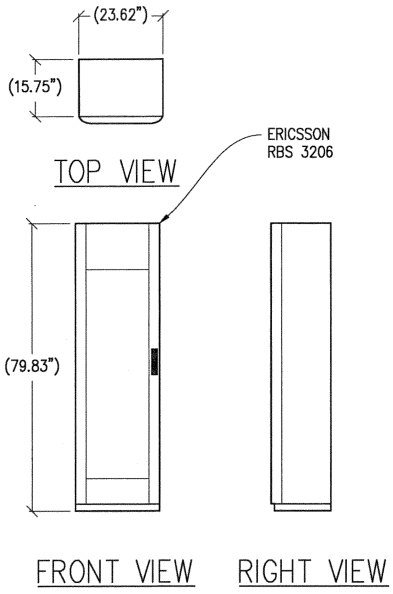

1 RBS DETAIL
½"=1'

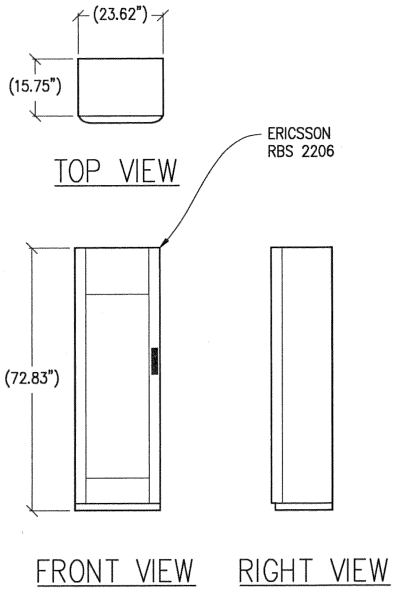

2 RBS DETAIL
½"=1'

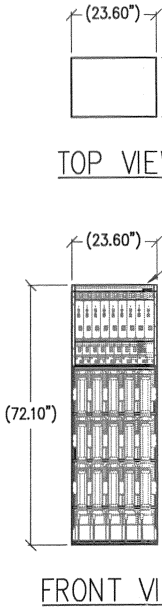

3 BBU CA
½"=1'

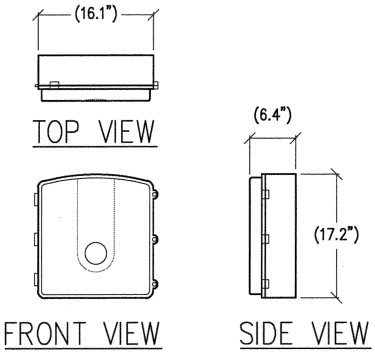

4 CN 3911 DETAIL
1"=1'

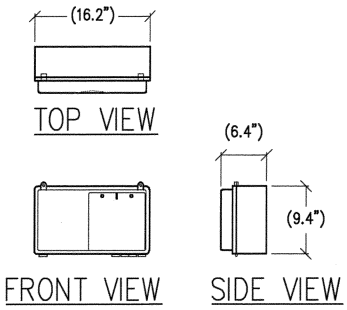

5 UAM DETAIL
1"=1'

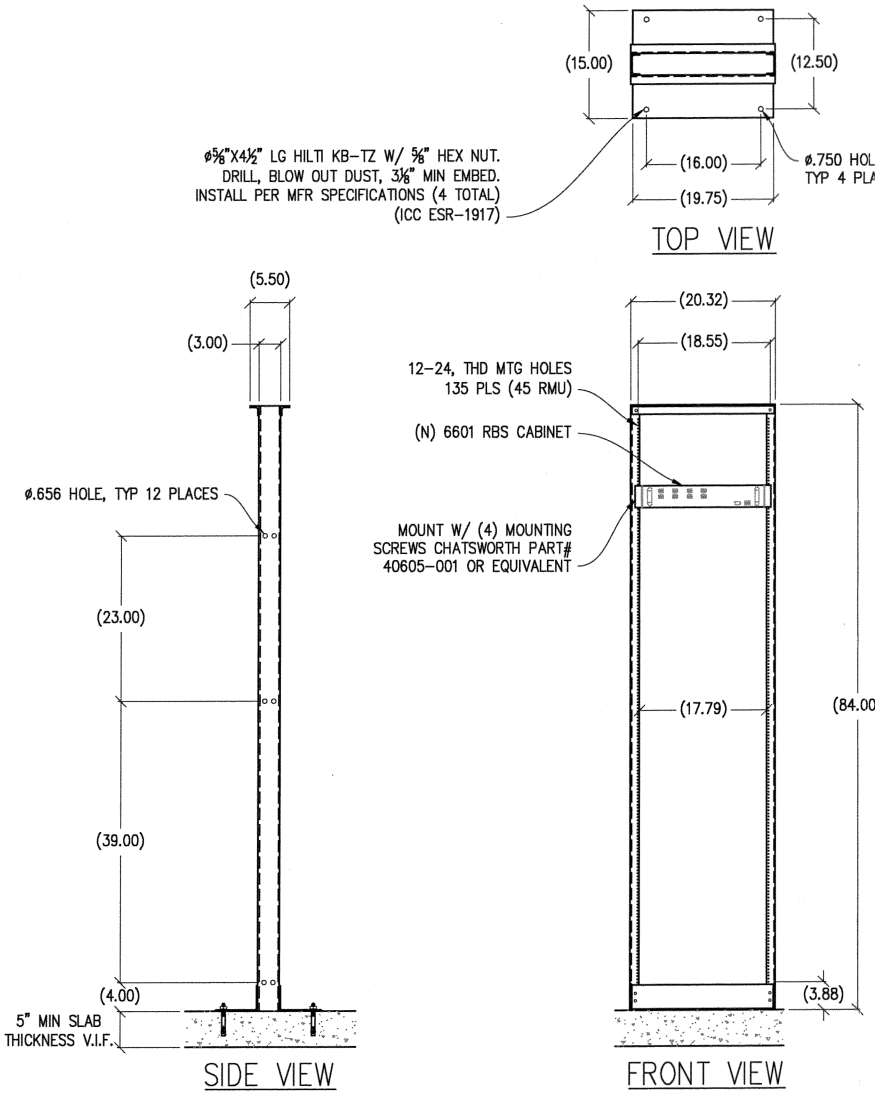

6 19" RACK DETAIL
1"=1'

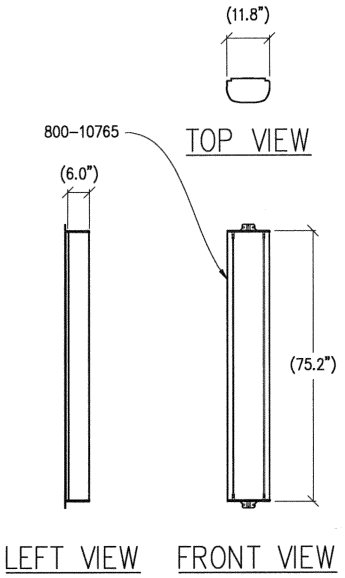

1 ANTENNA DETAIL
½"=1'

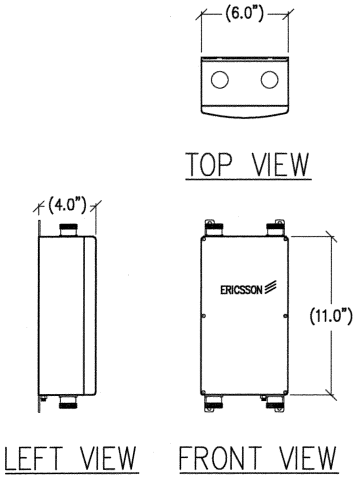

2 DTMA DETAIL
1"=6"

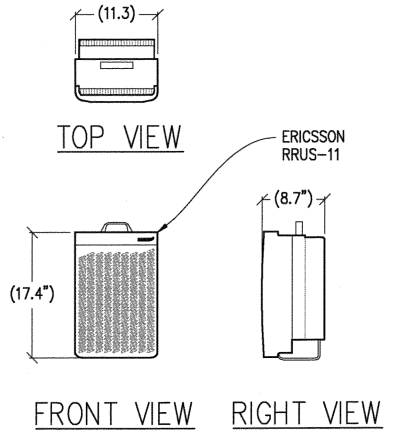

3 RRUS-11 DETAIL
1"=1'

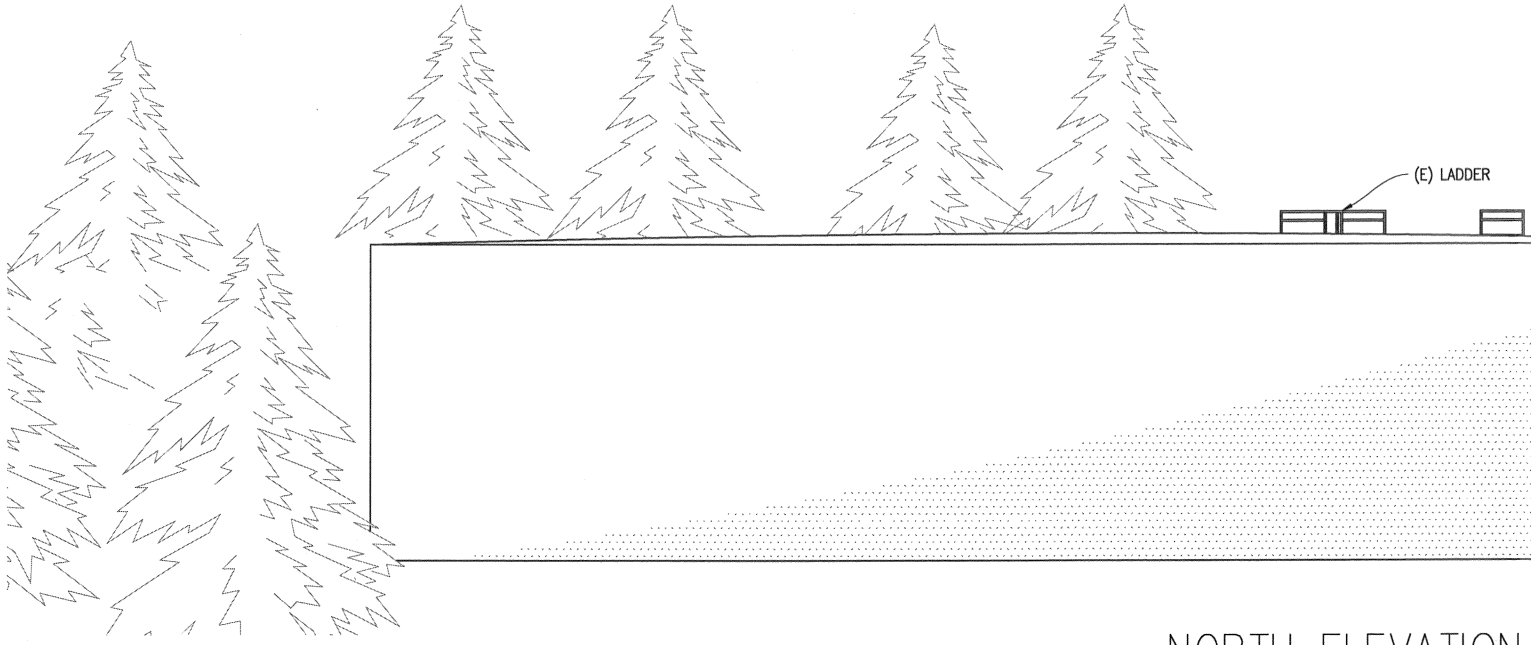

NORTH ELEVATION

1/8"=1'

(E) T-MOB

(P) AT&T ANTENNAS

(E) 68' HIGH M

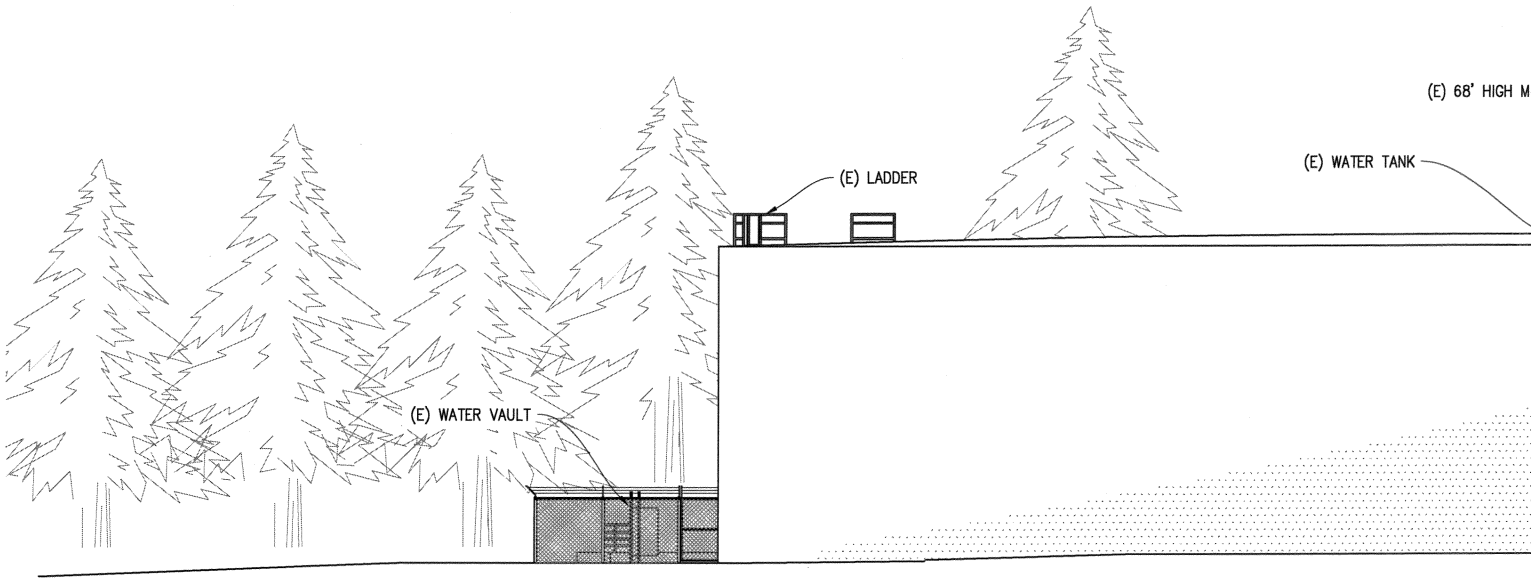

EAST ELEVATION

1/8"=1'

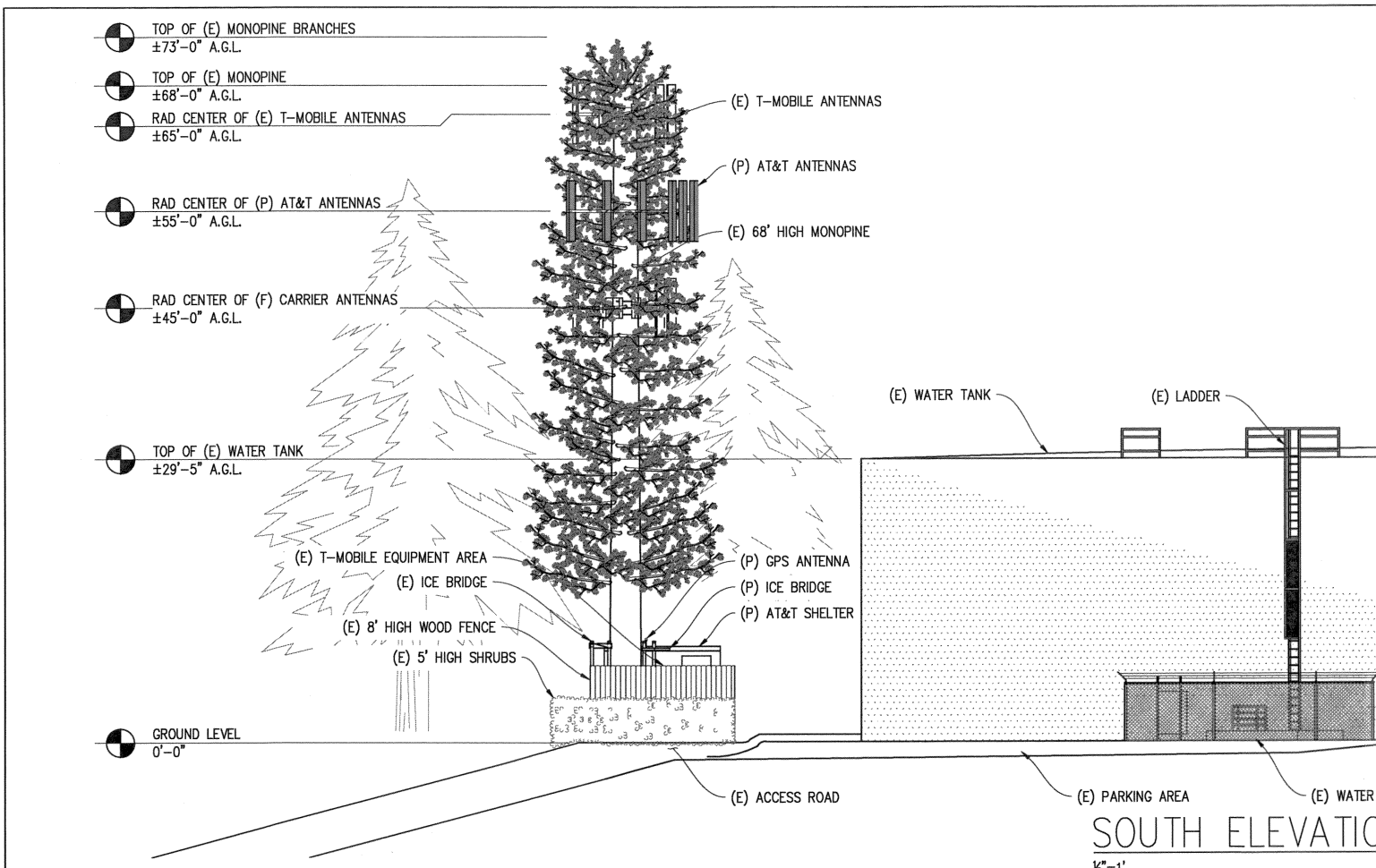

SOUTH ELEVATIO

1/8"=1'

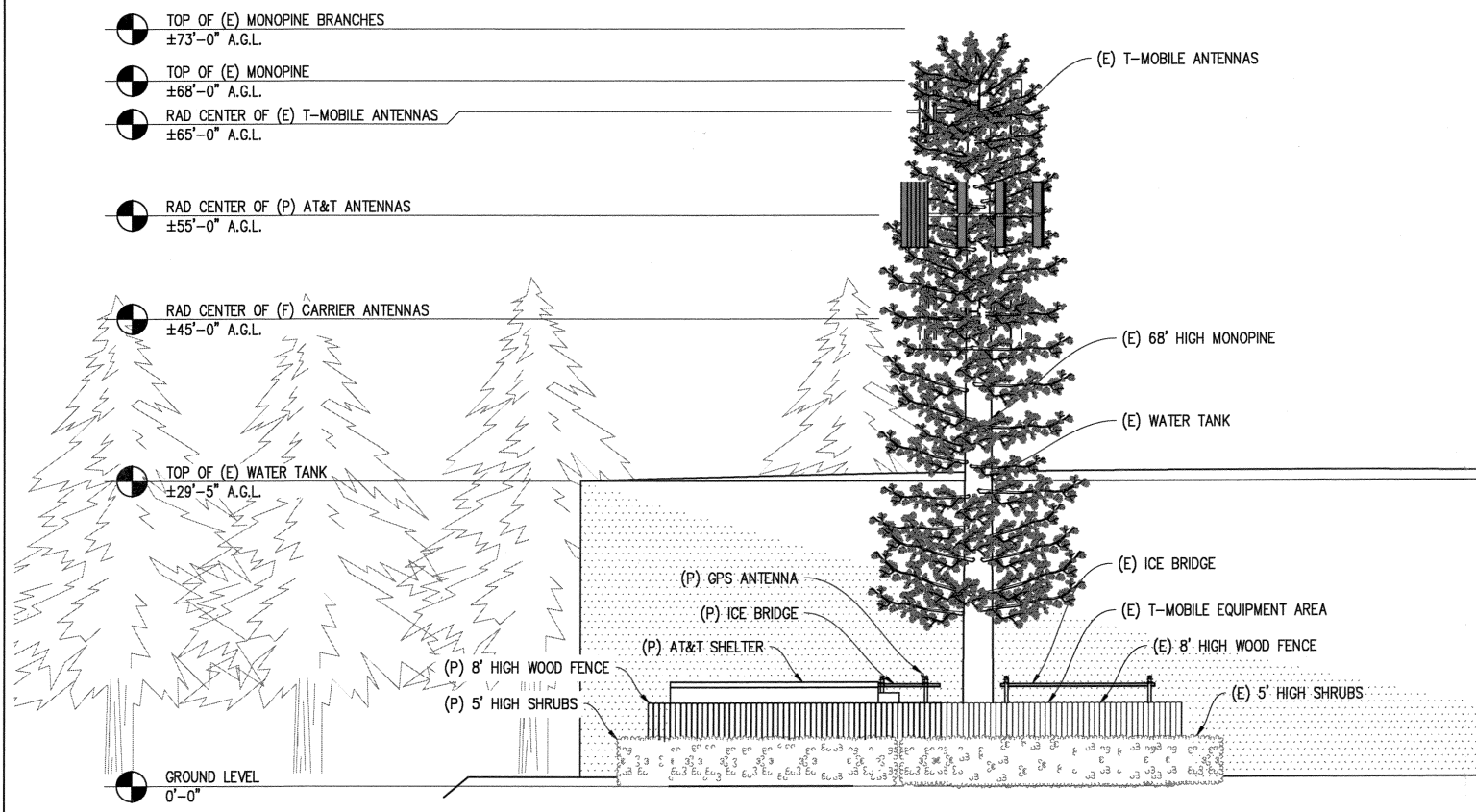

WEST ELEVATION

1/8"=1'

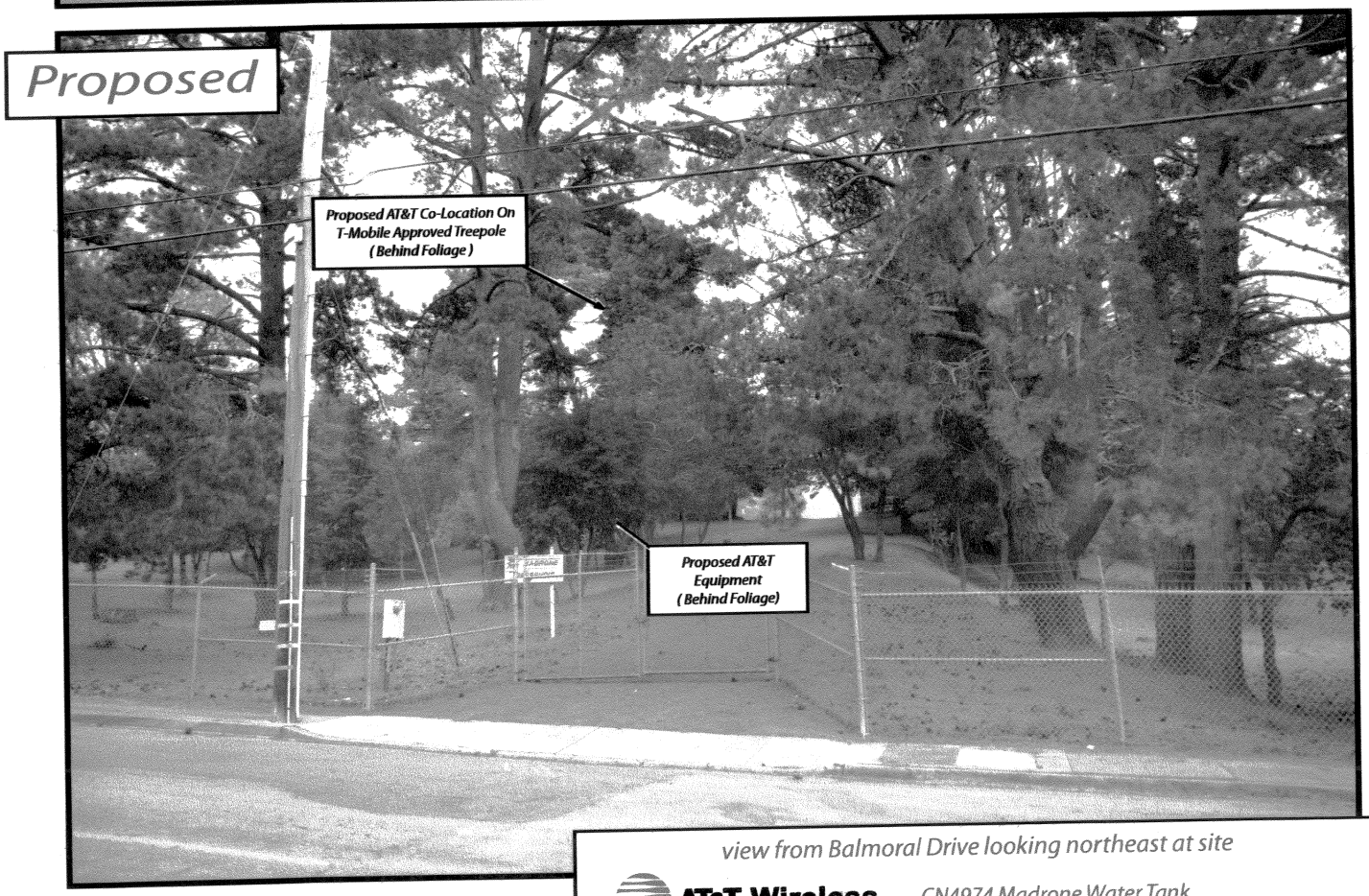

view from Balmoral Drive looking northeast at site

AT&T Wireless

9-28-2010

CN4974 Madrone Water Tank
12250 Skyline Boulevard, Oakland, CA

AdvanceSim
Photo Simulation Solutions
Contact (925) 202-8507

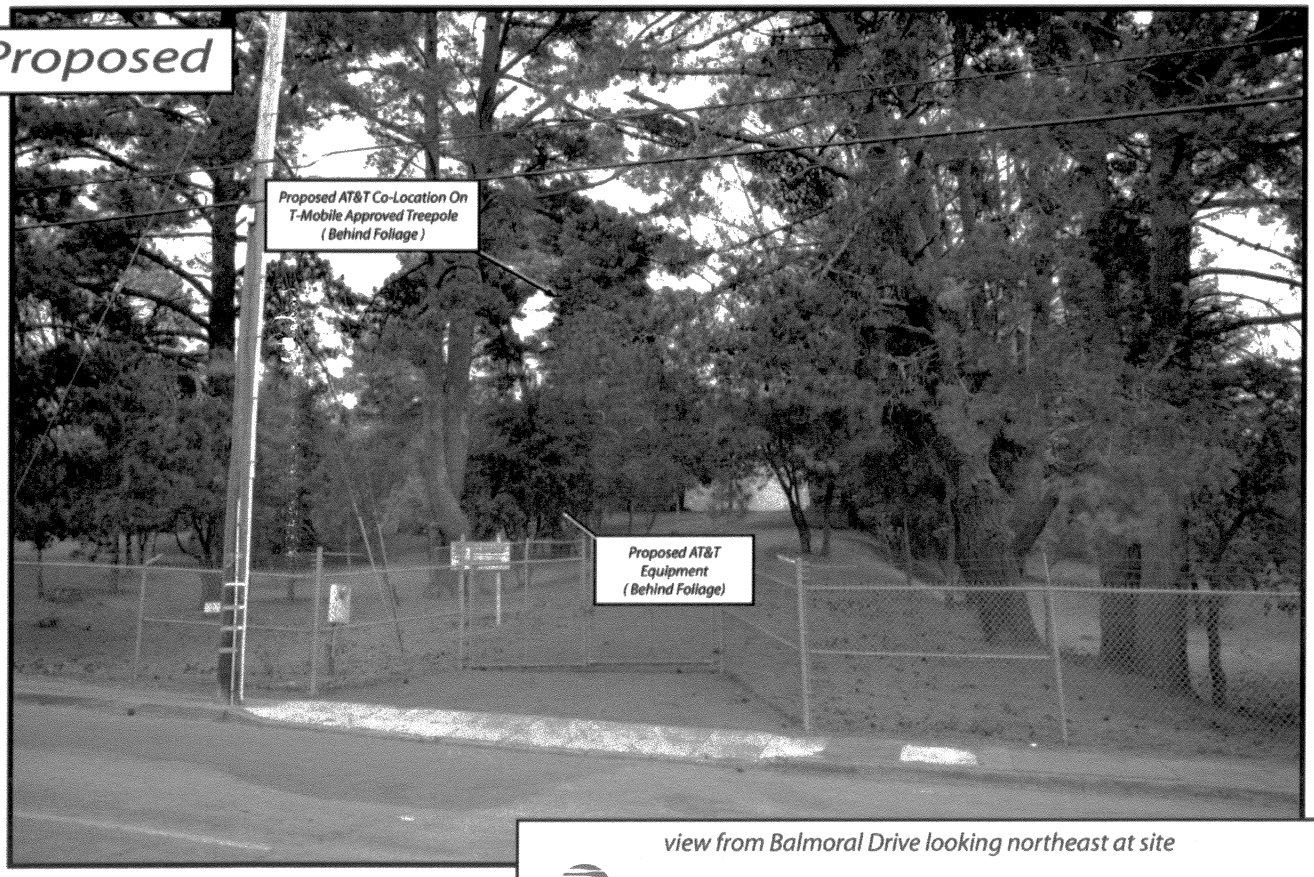

view from Balmoral Drive looking northeast at site

AT&T Wireless

9-28-2010

CN4974 Madrone Water Tank
12250 Skyline Boulevard, Oakland, CA

AdvanceSim
Photo Simulation Solutions
Contact (925) 202-3507

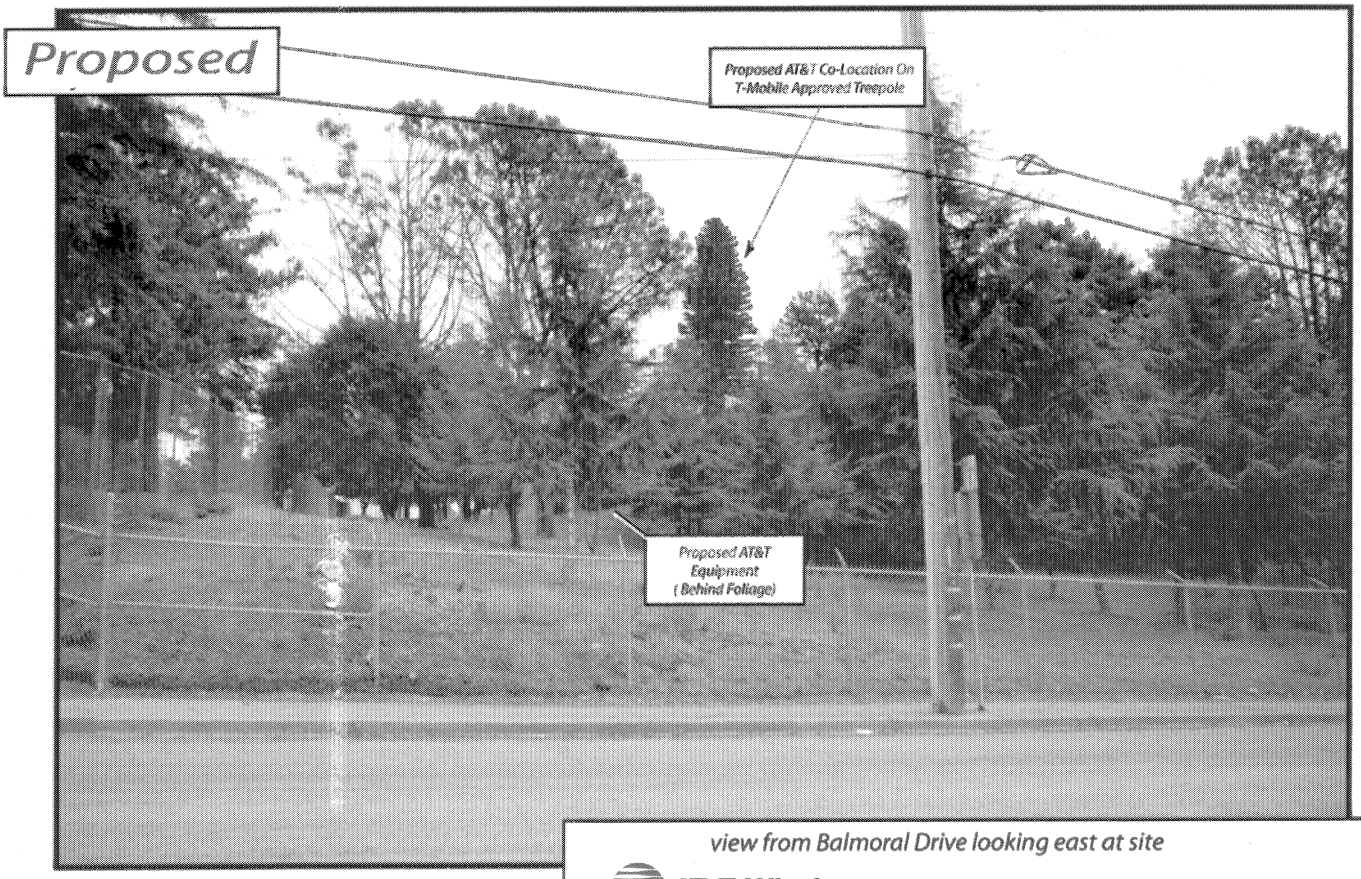

view from Balmoral Drive looking east at site

AT&T Wireless

9-28-2010

BA42628 Skyline Water Tank
12250 Skyline Boulevard, Oakland, CA

AdvanceSim
Photo Simulation Solutions
Contact (925) 202-8507

Radio Frequency Analysis

AT&T Mobility

Site # CN4974

"Madrone Water Tank"

12250 Skyline Blvd.

Oakland, CA 94619

By: Evan Wappel

Last Update: Devan Knight

Date: 9/23/2010

at&t

Report Summary

Based upon information provided by AT&T Mobility and the design engineer, and using the calculated method for determining RF field strength, it is the engineer's opinion that the proposed AT&T Mobility site to be located at 12250 Skyline Blvd., Oakland, CA 94619 will comply with the FCC's current prevailing standard for limiting human exposure to RF energy.

Due to the mounting method utilized, the general public would not normally be able to approach the antennas. Therefore, no significant impact on the general population is expected. The calculated electromagnetic field strength level in publicly accessible areas is less than the existing standard allows for exposure of unlimited duration. Additionally, due to the mounting method used, no significant impact on the environment is expected.

For personnel who work within 11' of the face of an antenna, a training program in exposure to RF fields is recommended. Maintenance personnel should be instructed to contact the appropriate Carrier prior to working in front of an antenna.

Recommended Signage

There is no RF caution signs required at the site.

Background

Evan Wappel is the Market RF Safety Coordinator for AT&T Mobility and is responsible for conducting a Radio Frequency (RF) electromagnetic analysis for the AT&T Mobility site to be located at 12250 Skyline Blvd., Oakland, CA 94619. This analysis consists of a review of the proposed site conditions, calculation of the estimated RF field strength of the antennas, and the provision of a comparison of the estimated field strength with the Federal Communication Commission (FCC) recommended guidelines for human exposure to RF electromagnetic fields.

at&t

Site Description

Based upon the information provided by AT&T Mobility, 6 AT&T Mobility panel antennas will be mounted on a monopole. The antennas will be mounted approximately 52' (to bottom of antennas) above ground level. The antennas will be oriented such that the main lobes are oriented toward the horizon. Normal public access to the front of the antennas is not expected due to the mounting location and method utilized. Occupational access to the front of the antennas is not normally expected.

RF Field Strength Calculation Methodology

A generally accepted method is used to calculate the expected RF field strength. The method uses the FCC's recommended equation[1] which predicts field strength on a worst case basis by

Equation 1 $$S = \frac{(2\ )^2 PG}{4\pi R^2} = \frac{PG}{\pi R^2} = \frac{EIRP}{\pi R^2}$$

doubling the predicted field strength. The following equation is used to predict maximum RF field strength:

Where:
S = power density
P = power input to the antenna
G = power gain of the antenna in the direction of interest relative to an isotropic radiator
R = distance to the center of radiation of the antenna

[1] Reference Federal Communication Commission Office of Engineering Technology Bulletin 65

Cumulative Study

The ground level effect of the AT&T Mobility and other carriers' emissions was calculated using a maximum ERP of 5,500 watts. Results were calculated for a height of 6' above ground level. Using these factors, the maximum calculated AT&T Mobility fields at ground level are 0.6% of the existing standard for general population uncontrolled exposure. The additional antennas are for evaluation purposes only and the calculations for the two additional carriers are not based on actual data for any carrier.

See Table 1 for the FCC's guidelines on Maximum Permissible Exposure (MPE). Note that the RF ranges referenced for this analysis are the ranges of 300 – 1500 Mhz, and 1500 – 100,000 Mhz shown in Table 1, which is included in Appendix A.

Exposure Environments

The FCC guidelines incorporate two separate tiers of exposure limits that are dependent on the situation in which the exposure takes place and/or the status of the individuals who are subject to exposure. The decision as to which tier applies in a given situation should be based on the application of the following definitions.

Occupational/controlled exposure limits apply to situations in which persons are exposed as a consequence of their employment and in which those persons who are exposed have been made fully aware of the potential for exposure and can exercise control over their exposure. Occupational/controlled exposure limits also apply where exposure is of a transient nature as a result of incidental passage through a location where exposure levels may be above general population/uncontrolled limits (see below), as long as the exposed person has been made fully aware of the potential for exposure and can exercise control over his or her exposure by leaving the area or by some other appropriate means.

General population/uncontrolledexposure limits apply to situations in which the general public may be exposed or in which persons who are exposed as a consequence of their employment may not be made fully aware of the potential for exposure or cannot exercise control over their exposure. Therefore, members of the general public always fall under this category when exposure is not employment-related.

For purposes of applying these definitions, awareness of the potential for RF exposure in a workplace or similar environment can be provided through specific training as part of a RF safety program. Warning signs and labels can also be used to establish such awareness as long as they provide information, in a prominent manner, on risk of potential exposure and instructions on methods to minimize such exposure risk. For example, a sign warning of RF exposure risk and indicating that individuals should not remain in the area for more than a certain period of time could be acceptable.

Another important point to remember concerning the FCC's exposure guidelines is that they constitute ***exposure*** limits (not ***emission*** limits), and they are relevant only to locations that are ***accessible*** to workers or members of the public. Such access can be restricted or controlled by appropriate means such as the use of fences, warning signs, etc., as noted above. For the case of occupational/controlled exposure, procedures can be instituted for working in the vicinity of RF sources that will prevent exposures in excess of the guidelines. An example of such procedures would be restricting the time an individual could be near an RF source or requiring that work on or near such sources be performed while the transmitter is turned off or while power is appropriately reduced.

Qualifications of Reporting Engineer

Mr. Wappel has been involved in the analysis of RF emissions since 1999. He has designed numerous RF systems including both site design and RF system design. He is an Electrical Engineer, and all contents of this report are true and correct to the best of his knowledge.

Signed: _____ Date: 9/23/2010

Evan Wappel, BSc,EE

at&t

APPENDIX A

Term Definitions

Exposure Exposure occurs whenever and wherever a person is subjected to electric, magnetic or electromagnetic fields other than those originating from physiological processes in the body and other natural phenomena.

Exposure, partial-body. Partial-body exposure results when RF fields are substantially nonuniform over the body. Fields that are nonuniform over volumes comparable to the human body may occur due to highly directional sources, standing-waves, re-radiating sources or in the near field.

General population/uncontrolled exposure. For FCC purposes, applies to human exposure to RF fields when the general public is exposed or in which persons who are exposed as a consequence of their employment may not be made fully aware of the potential for exposure or cannot exercise control over their exposure. Therefore, members of the general public always fall under this category when exposure is not employment-related.

Maximum permissible exposure (MPE). The rms and peak electric and magnetic field strength, their squares, or the plane-wave equivalent power densities associated with these fields to which a person may be exposed without harmful effect and with an acceptable safety factor.

Occupational/controlled exposure. For FCC purposes, applies to human exposure to RF fields when persons are exposed as a consequence of their employment and in which those persons who are exposed have been made fully aware of the potential for exposure and can exercise control over their exposure. Occupational/controlled exposure limits also apply where exposure is of a transient nature as a result of incidental passage through a location where exposure levels may be above general population/uncontrolled limits (see definition above), as long as the exposed person has been made fully aware of the potential for exposure and can exercise control over his or her exposure by leaving the area or by some other appropriate means.

at&t

Table 1
LIMITS FOR MAXIMUM PERMISSIBLE EXPOSURE (MPE)

(A) Limits for Occupational/Controlled Exposure

Frequency Range (MHz)	Electric Field Strength (E) (V/m)	Magnetic Field Strength (H) (A/m)	Power Density (S) (mW/cm^2)	Averaging Time $\|E\|^2$, $\|H\|^2$ or S (minutes)
0.3-3.0	614	1.63	(100)*	6
3.0-30	1842/f	4.89/f	($900/f^2$)*	6
30-300	61.4	0.163	1.0	6
300-1500	--	--	f/300	6
1500-100,000	--	--	5	6

(B) Limits for General Population/Uncontrolled Exposure

Frequency Range (MHz)	Electric Field Strength (E) (V/m)	Magnetic Field Strength (H) (A/m)	Power Density (S) (mW/cm^2)	Averaging Time $\|E\|^2$, $\|H\|^2$ or S (minutes)
0.3-1.34	614	1.63	(100)*	30
1.34-30	824/f	2.19/f	($180/f^2$)*	30
30-300	27.5	0.073	0.2	30
300-1500	--	--	f/1500	30
1500-100,000	--	--	1.0	30

f = frequency in MHz *Plane-wave equivalent power density

NOTE 1: ***Occupational/controlled*** limits apply in situations in which persons are exposed as a consequence of their employment provided those persons are fully aware of the potential for exposure and can exercise control over their exposure. Limits for occupational/controlled exposure also apply in situations when an individual is transient through a location where occupational/controlled limits apply provided he or she is made aware of the potential for exposure.

NOTE 2: ***General population/uncontrolled***exposures apply in situations in which the general public may be exposed, or in which persons that are exposed as a consequence of their employment may not be fully aware of the potential for exposure or can not exercise control over their exposure.
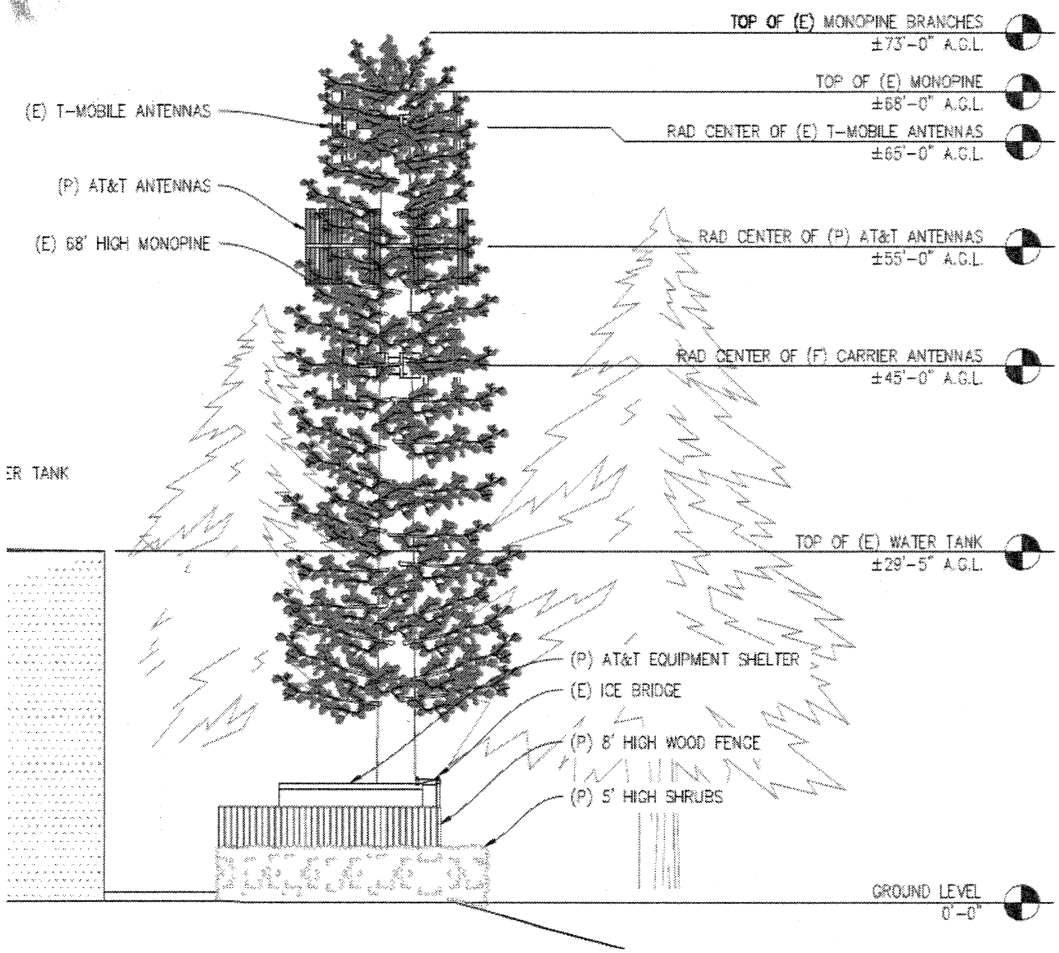
Drawing of site layout: